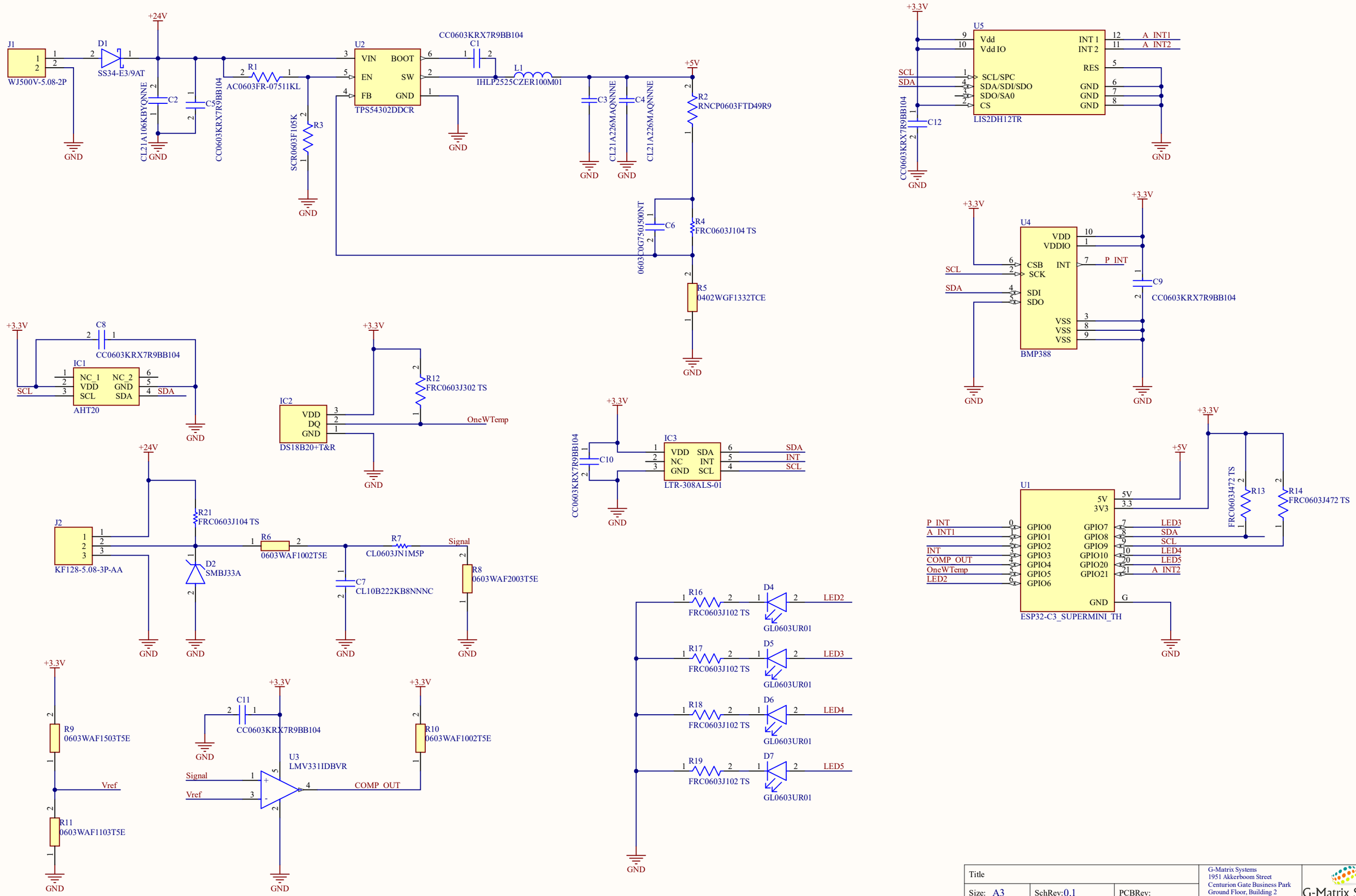

Title			G-Matrix Systems 1951 Akkerboom Street Centurion Gate Business Park Ground Floor, Building 2 Centurion 0157
Size: A3	SchRev: 0.1	PCBRev:	G-Matrix Systems Integrated System Design
Date: 2026/02/15	Time: 12:35:30	Sheet 1 of 1	
File: Main.SchDoc			